ARIES 2000

USER MANUAL



MADE IN THE UK

BioCote

UK CA

CE

ABACUS

SPECIALIST BATHROOM SOLUTIONS

TABLE OF CONTENTS

Introduction 3
Copyright 3
Preface 3
Intended Use 3
Recycling 4
Future Product Development 4
Bath and Equipment Overview 5
Specifications and Dimensions 9
Specifications 9
Dimensions 10
Safety Information 11
Purposes of Warnings, Cautions and Notes 12
Health and Safety Warnings 12
Health and Safety Cautions 13
Health and Safety Notes 14
Labels 15
Identification Label 16
User Information 17
Remote Handset 17
Close the Pop-Up Waste 18
Fill the Bath 18
Transfer the Bather into the Bath 20
Top Up the Bath 21
Transfer Bather out of the Bath 22
Empty the Bath 22
Raise the Platform 23
Optional Equipment 24
Easy Shower 5 24
Roaming Shower 25
Autofill 26
Twin Lever Bath Filler 27
Backrest 28
Footrest 28
Schuchmann Basti Seat 29
Maintenance and Cleaning 30
Platform Rod Seals 33
Troubleshooting 34
Warranty 36
Declaration of Conformity 37
Electromagnetic Compatibility 39
Guidance and Manufacturer's Declaration - Electromagnetic Immunity 39

INTRODUCTION

COPYRIGHT

This user manual is supplied with the purchase of a bath and any optional equipment and is intended to provide information on its correct and safe use. Copying it for these purposes is only permitted if it is copied in its entirety to ensure all the pertinent health and safety related information along with the user information is retained together as a whole. Copying part of the manual for the purposes detailed above is not permitted under any circumstances © 2026.

Abacus Healthcare is part of **Gainsborough Healthcare Group Ltd**., 10 & 11, The Oaks, Clews Rd, Redditch, England B98 7ST.



Contact: Abacus Healthcare on 01527 400024

PREFACE

Additional reading and related information can be obtained upon request, including Circuit Diagrams, Component Parts Lists, Descriptions, Calibration Instructions, and other information that will assist service personnel.

If an alternative format of this or any other documentation is required, please contact your authorised representative or **Gainsborough Healthcare Group Ltd**. on 01527 400022.

INTENDED USE

The bath is designed to be used for general hygiene purposes as well as relaxation. It must not be used for any other purpose.

This equipment is intended to facilitate the bathing of residents in care facilities or in a home care environment.

With the bath already filled with water, the bather either transfers themselves into the bath if they are able, or is transferred via hoist equipment. Then operated by the bath handset, the carer can adjust the height to a level most suitable for them. This way, the bather can enjoy their bath comfortably and easily.

RECYCLING

The following materials are used in the packaging of the bath for transportation purposes. Separate the materials and dispose of them at a recycling centre in line with your local authority's recommendations.

- Wood
- Cardboard
- Plastics

FUTURE PRODUCT DEVELOPMENT

Gainsborough Healthcare Group Ltd operates a policy of continuous product development and reserves the right to change specifications and designs without prior notice.

BATH AND EQUIPMENT OVERVIEW

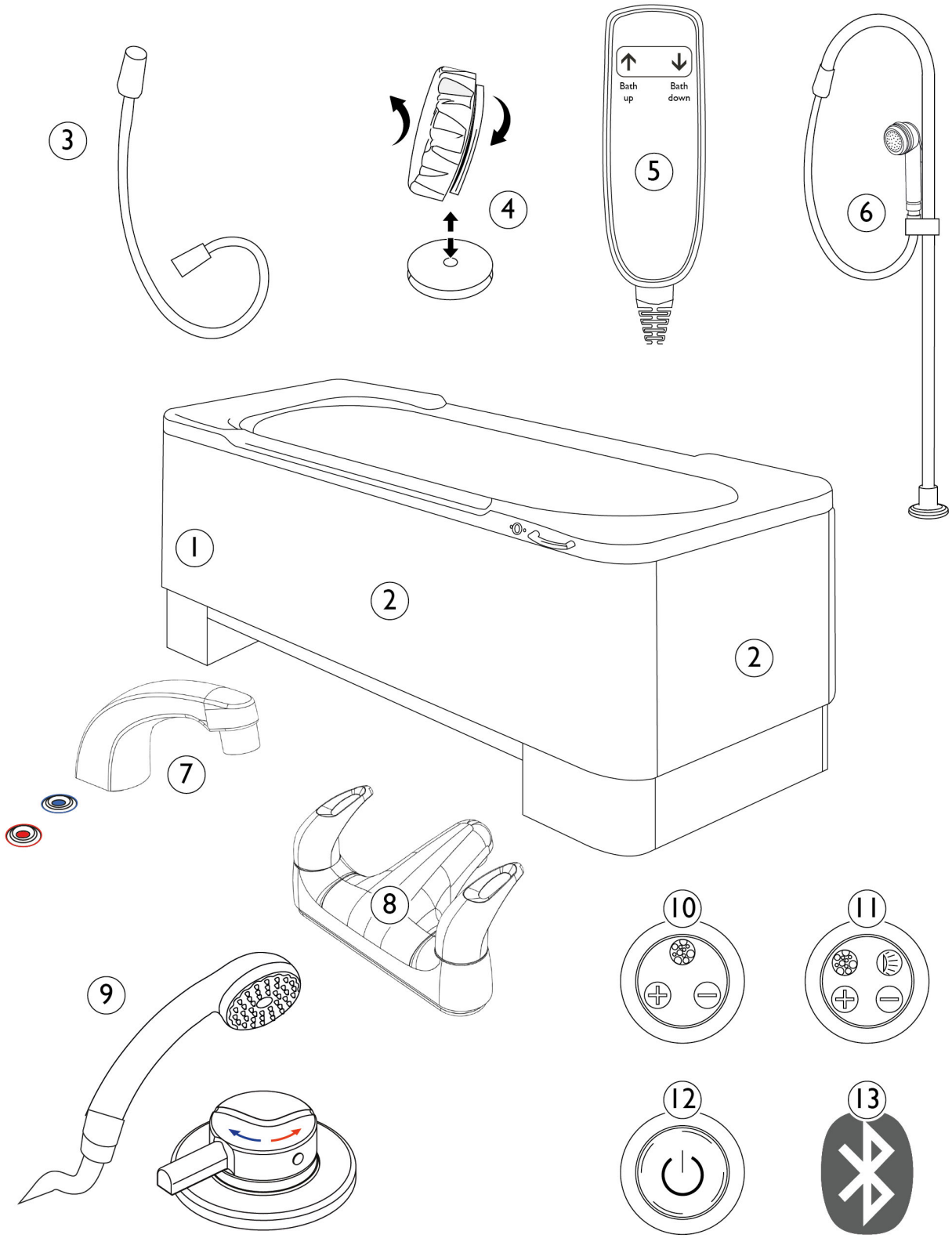

Not Drawn to Scale

Fig 0321

Key: Refer to Fig 0321

1 Variable height bath

2 Bath panels

3 Two metre shower hose (Option)

4 Pop-up waste

5 Remote handset

6 Shepherd's Crook shower system (Option)

7 Autofill (Option)

8 Twin lever bath filler (Option)

9 Roaming shower system (Option)

10 Air spa (Option)

11 Air spa and Chromotherapy lighting (Option)

12 Chromotherapy lighting (Option)

13 Sound system compatible with smart phone and tablets (Option)

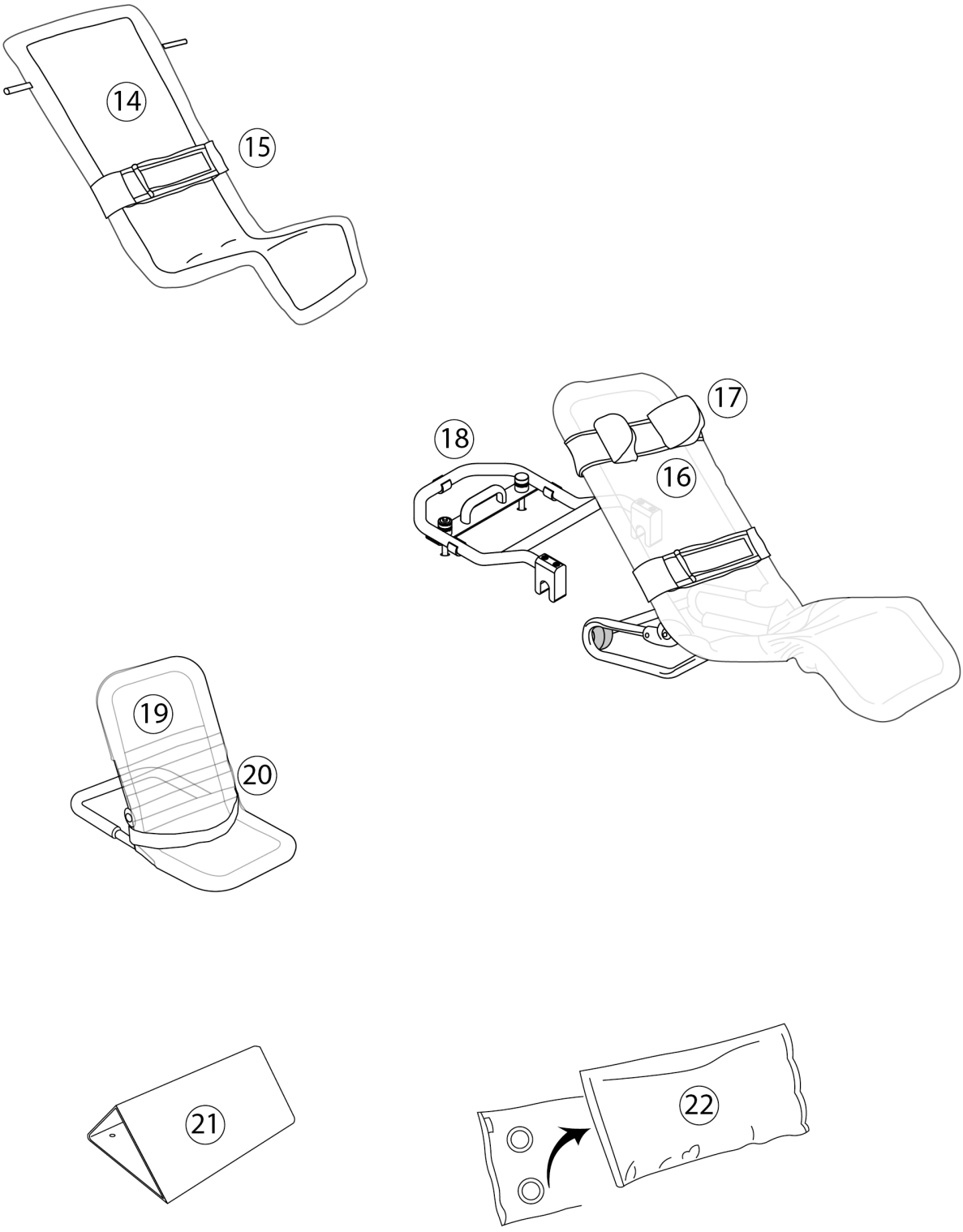

Fig 0322

Key: Refer to Fig 0322

14 Laze Net Postural Support (Option)

15 Laze Net Postural Support Padded Chest Strap (Option)

16 Schuchmann Basti seat - for use in conjunction with the Basti seat fixing bracket (Option)

17 Schuchmann Basti Head Guide Pad (Option)

18 Basti seat fixing bracket - see item 16 (Option)

19 Schuchmann Bibi Seat (Option)

20 Schuchmann Bibi Lap Belt (Option)

21 Suckered knee break with padded knee break pad (Option)

22 Multi-purpose mesh cushion with suckers (Option)

SPECIFICATIONS AND DIMENSIONS

SPECIFICATIONS

Maximum User Weight:	250 kg
Water Capacity:	350 litres
Approximate Bath Weight (empty):	136 kg
Approximate Bath Weight (full):	486 kg
Typical Mechanical Operation Times:	Bath raise - 38 secs Bath lower - 37 secs
Class I Electrical Device	
Power Supply:	Mains 230V to be supplied via 30 mA RCD (Type A or F)
Operating Voltage:	24V
Fuse (powered bath/platform):	5A with suitably IP rated Double Pole Switched Fused Spur
Fuse (accessories):	13A with suitably IP rated Double Pole Switched Fused Spur
Battery Backup:	24V DC (lead acid), for emergency use only
Actuator Duty Cycle:	Max. 10% or 2 min continuous use followed by 18 min not in use. The life cycle test has been performed with a stabilised power supply (10% duty cycle) on a 20 mm stroke actuator at max. load for 10,000 cycles at ambient temperature.
Water Supply:	Unblended hot and cold water at 1 bar min., 5 bar max. pressure
Hot Water Temperature:	55°C to 65°C
Cold Water Temperature:	5°C to 20°C
Flow Rate:	10 litres per minute
'A' weighted sound emission:	<60 dB(A)
'A' weighted sound emission with air spa system (option):	<75 dB(A)
Ambient temperature range:	5°C to 50°C
Relative humidity range:	10-80%
Atmospheric pressure range:	50 kPa to 106 kPa
This bath includes BioCote® technology which has been proven to reduce bacteria and even some viruses, including influenza A H1N1, E.coli, MRSA and Pseudomonas.	

DIMENSIONS

Aries 2000

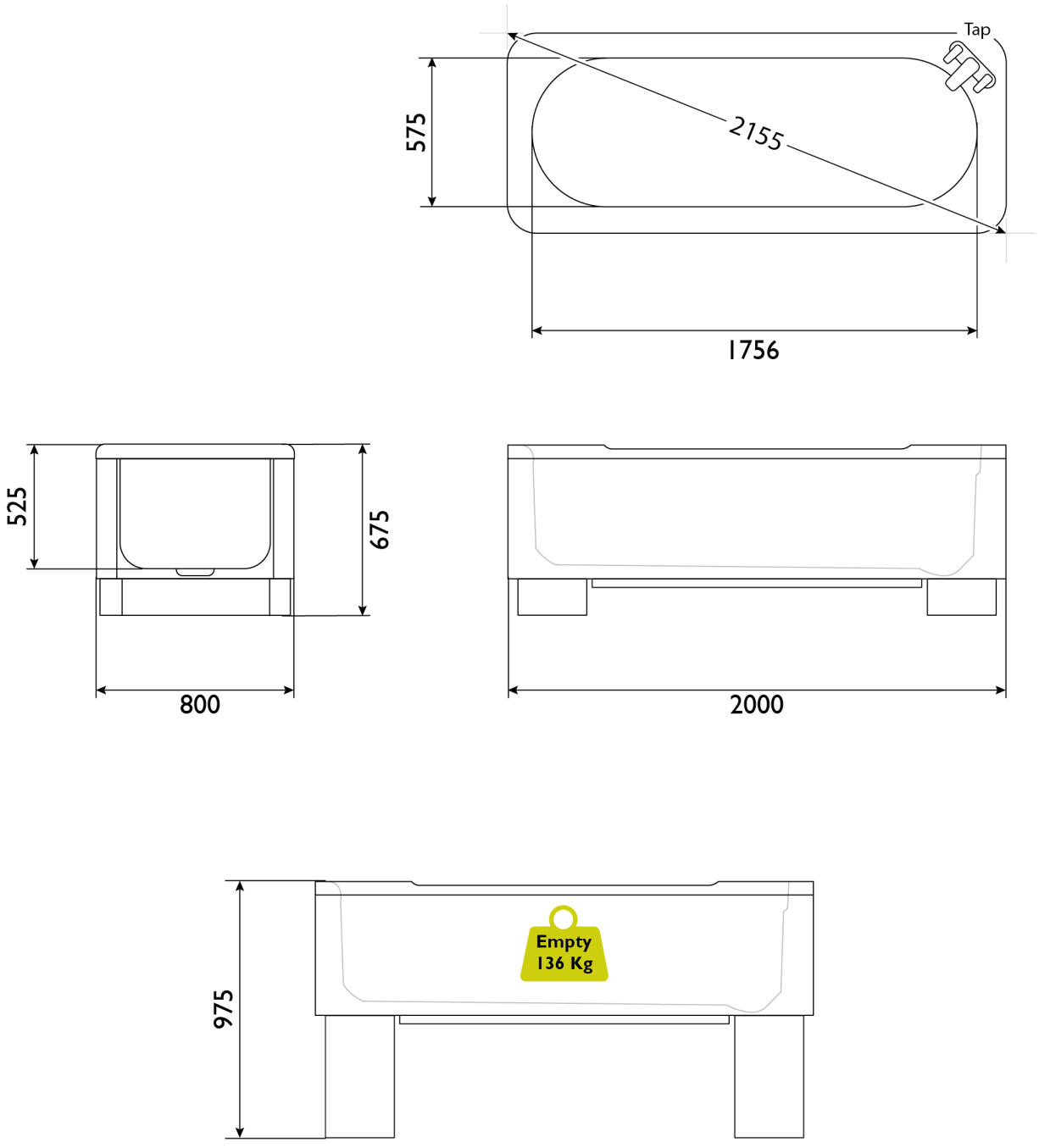

Fig 0249

Refer to Fig 0249, dimensions in millimetres (mm). Left hand example (handing of a bath is indicated by the exit point of the bath when in a seated position).

SAFETY INFORMATION



WARNING RISK OF ELECTROCUTION/FIRE/ENTRAPMENT:
Modifying the bath/equipment could cause serious injury or prove fatal. Under **NO CIRCUMSTANCES** should you modify the bath/equipment.

Your bath, supplied by the **Gainsborough Healthcare Group Ltd.**, is part of a range of products designed and built for bathers in care homes, hospitals and other specialist care environments.

Please ensure that you read and thoroughly understand this user manual. This information is vital for the correct operation of the bath, ensuring the safety of both bather and operator at all times.

Please use this bath in the manner specified in this manual. **Gainsborough Healthcare Group Ltd.** do not take any liability if the product is misused.

To ensure best practice and safety the bath must be operated only by a trained person with adequate understanding of the specific environment, its common practices and processes. It is vital that regular assessments of the bather are undertaken to ensure the bath remains suitable. **Gainsborough Healthcare Group Ltd.** does not take responsibility for individual product suitability.

Depending on configuration, your bath may have sensory features installed. These are for the enjoyment and relaxation of the bather. To ensure these features are used appropriately, the bather's condition must be assessed prior to operation.

Accessories and any detachable parts must be used as described in this user manual and must not be modified or used with other equipment not specified in this user manual.

This bath is for hygiene and relaxation purposes only. DO NOT use for any other purpose.

To avoid entrapment, make sure that the path of movement is free from obstacles. Make sure the bather retains a comfortable and safe position. To avoid injury, do not leave the bather at any time. The bather must not be allowed to exit the bath whilst the bath is in the raised position. This could potentially cause serious injury to the bather and could also damage the product. **Gainsborough Healthcare Group Ltd.** does not take any liability if misused in this manner.

Any modifications to the bath or significant changes to its surrounding environment and installation may affect important safety and performance related functions. **Gainsborough Healthcare Group Ltd.** is not responsible for any safety incidents or functional performance issues arising as a result of any modifications that have not been approved in advance by **Gainsborough Healthcare Group Ltd**.



If you have any questions regarding the user manual or operation of the bath, feel free to contact your authorised representative or **Gainsborough Healthcare Group Ltd.** on 01527 400022.

PURPOSES OF WARNINGS, CAUTIONS AND NOTES

Warnings, Cautions and Notes used throughout this manual have the following meanings:



WARNINGS: Warnings used throughout this manual **MUST** be followed carefully. Failure to do so could result in serious bodily injury or could be fatal.



CAUTIONS: Cautions used throughout this manual **MUST** be observed to avoid damage to your bath or additional optional equipment.



NOTES: Notes used throughout this manual contain important information and useful tips on the operation of this product.

HEALTH AND SAFETY WARNINGS

The following warnings and any additional warnings used throughout this manual **MUST** be followed carefully failure to do so, could result in serious bodily injury or could be fatal.



WARNING RISK OF ENTRAPMENT: Operating the bath without appropriate training in its safe use could cause serious injury or be fatal by entrapment. Ensure that the people operating the bath have been trained, read this manual and understand its safe use.



WARNING RISK OF ENTRAPMENT: Operating the bath when people are nearby could cause serious injury or be fatal by entrapment. Ensure that nobody is close to the moving equipment during its operation.



WARNING RISK OF ELECTRIC SHOCK: Using electrical appliances near to the bath could cause electric shock which may be fatal. **DO NOT** use electrical appliances within 3 metres of the bath.



WARNING RISK OF ELECTRIC SHOCK: Ensure the electric supply is installed by a qualified electrician using current legislation. The protective earth terminal of the equipment must only be connected to a supply main with protective earth using a 30 mA Residual Current Device (RCD) Type A or F.



WARNING RISK OF SLIPPING: Water left on the floor could cause serious injury or be fatal by slipping. Ensure the floor area around the bath is always free from water. Clean and dry **ANY** spillages immediately.

HEALTH AND SAFETY CAUTIONS

The following cautions and any additional cautions used throughout this manual **MUST** be observed to avoid damage to your bath or additional optional equipment.

Gainsborough Healthcare Group Ltd. is not responsible for replacing any items damaged as a result of not observing the following cautions.



CAUTION: Bath could be damaged irreparably if objects or equipment are trapped during operation. Ensure nothing is left under the bath or platform that could become trapped.



CAUTION: Remote handset could be irreparably damaged if fully immersed in water. Ensure the remote handset is **ALWAYS** returned to its holder after use.



CAUTION: The bath and any additional equipment could be damaged if used for anything other than its intended use, which may be irreparable. **NEVER** use the bath for anything other than its intended use.



CAUTION: The bath and any additional equipment could be damaged irreparably, if abrasive cleaners, bleach, alcohol or scourers are used. Use cleaning methods outlined in the Maintenance and Cleaning section only.



CAUTION: Do not exert excessive pressure on the bath panels as this may cause them to become ill-fitting or damaged over time.

HEALTH AND SAFETY NOTES

The following notes and any additional notes used throughout this manual contain important information and useful tips on the operation of this product.



NOTE: The system batteries must be charged for 24 hours prior to using the bath. You may test the bath operation when empty to ensure it is working correctly.



NOTE: If this unit is to be utilised by many different bathers, we would strongly recommend that it is cleaned regularly with a medical disinfectant as well as following the strict cleaning routine outlined in the Maintenance and Cleaning section.



NOTE: In the event of mains failure during use of the bath, back-up batteries will enable the bather to exit the bath. The bath will then be disabled until mains power is restored.



NOTE: If any serious incident occurs in relation to the device this should be reported to the manufacturer and the competent authority in which the user and/or patient is established.



NOTE: Expected lifetime of this product is 8 years and approximately 5 years for the battery back-up system, when adhering to our service and maintenance guidelines.

LABELS

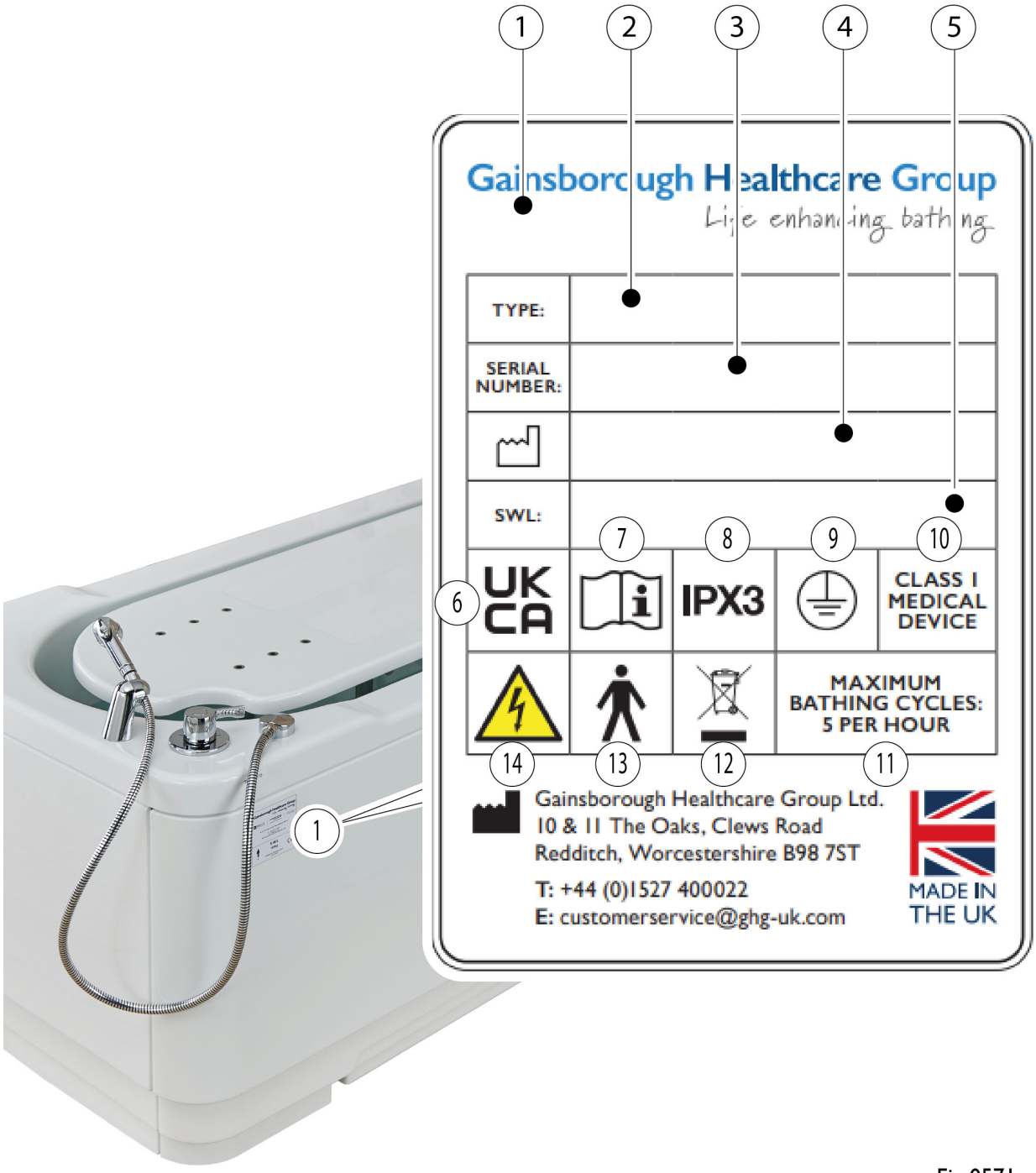

Fig 0571

IDENTIFICATION LABEL

NOTE: The Identification label attached to your bath contains critical information! **DO NOT** remove it from its location. The serial number is required for maintenance, information or spare parts. It is recommended that you make a note of it below for future reference.

KEY (Refer to Fig 0571)

1	Identification label and its location
2	Type of bath this user manual refers to
3	Unique identification number (this is needed for maintenance, information or spares)

Serial Number:

4	Manufacturing location
5	The Safe Working Load
6	UK Conformity Assessed marking
7	Read instruction manuals and accompanying documents
8	Ingress Protection (IP) rating (Protected against direct moisture spray at an angle of 60° from the vertical)
9	Type of protection: Class I
10	Class I medical device
11	Maximum number of baths allowed per hour
12	No domestic waste. Separate electrical and electronic components for recycling in accordance with European Directive 2012/19/EU (WEEE)
13	Application part 'Type B' according to DIN EN 60601-1
14	This product is powered. Warning dangerous voltage

USER INFORMATION

REMOTE HANDSET

CAUTION: If submerged in water, the remote handset could be damaged irreparably. Ensure the remote handset is **ALWAYS** returned to its holder after use.

The remote handset has four control buttons as shown in Fig 0228 and is located in the holder on the side of the bath.

1. To operate any of the buttons, press lightly and hold. Releasing it at any time will stop the operation.
2. All operations automatically stop once they have reached their maximum extent; when the bath is at its maximum height, for example.
3. It is completely safe to operate the handset with wet hands, but it should never be immersed in water, so always return to the holder after use.

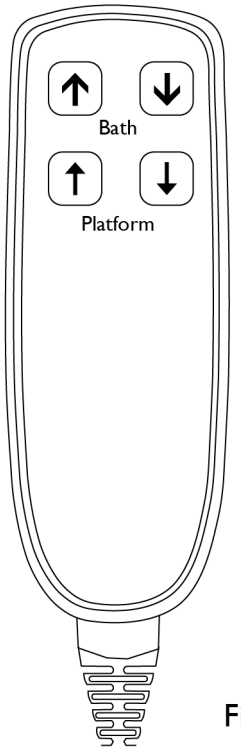

Fig 0228

NOTE: In the event of a power cut, the system is protected by Battery Back-Up, so the user can still safely exit the bath. In Battery Back-Up mode, the platform and bath will operate at half speed. When the Battery Back-Up begins to lose power, there is an audible beep each time a button is pressed on the handset. Please see *troubleshooting, page 34* for further information.

CLOSE THE POP-UP WASTE

The bath comes with a pop-up waste as standard.

1. Refer to Fig 0196. Turn the chrome handle (a) anti-clockwise and the pop-up waste plug (b) closes.

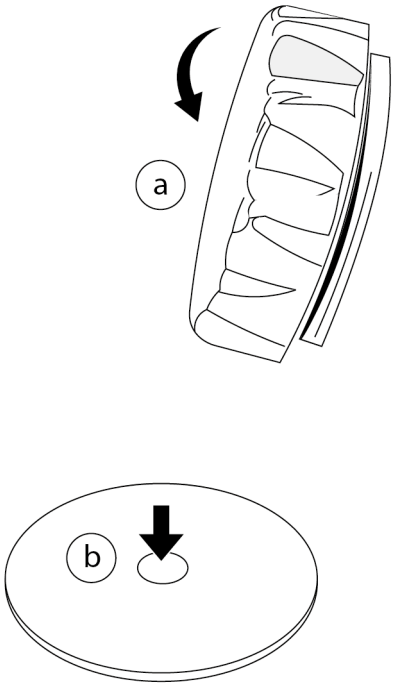

Fig 0196

FILL THE BATH



WARNING RISK OF SCALDING: Not checking the water temperature could cause serious injury or be fatal. The temperature of the hot water is limited to 43°C for safety. Use a thermometer to observe the temperature whilst filling and again before transferring the bather into the bath.

Refer to Fig 0264. Depending on the options chosen you may have a twin lever bath filler (a), or the Autofill option (b).

1. Open the hot tap (c) and fill the bath to half full, or press the red autofill button (d) checking the temperature with a thermometer.

2. Where necessary adjust the temperature using the cold tap (e) or the blue autofill button (f).

The bath is now ready for the bather. Topping up the bath should be carried out when the bather is in position so that the carer can fill to the appropriate depth for the individual.

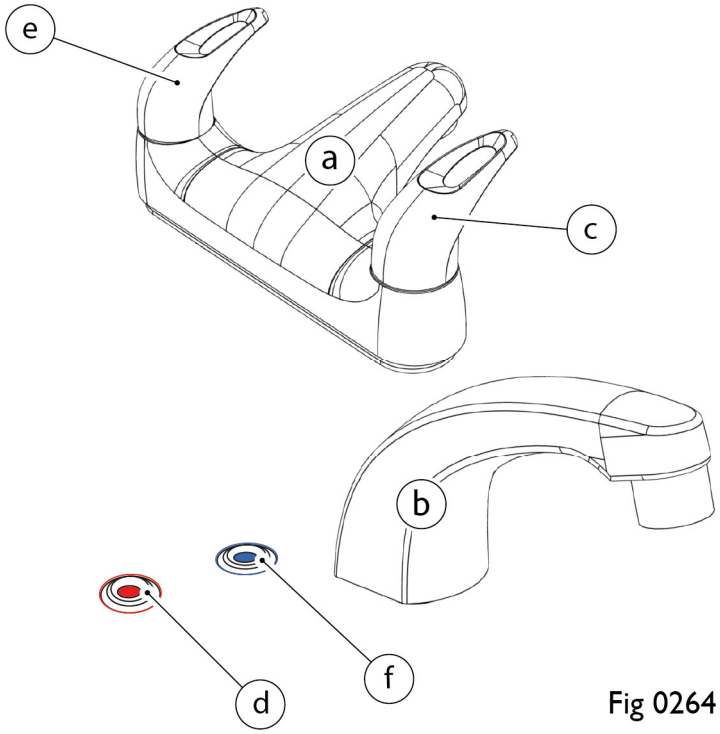

Fig 0264

CAUTION: Do not exert excessive pressure on the bath panels as this may cause them to become ill-fitting or damaged over time.

TRANSFER THE BATHER INTO THE BATH

CAUTION: DO NOT attempt to use this equipment if you have not been fully trained. Escalate to your local representative or contact **Gainsborough Healthcare Group Ltd.** on 01527 400022 and ask about product training sessions.

WARNING RISK OF ENTRAPMENT: Operating this bath/equipment when the bather is unsecured/unattended could cause serious injury or be fatal by entrapment. Ensure the bather is **NOT** left unattended and is seated properly at all times.

1. Refer to Fig 0573. Allow or assist the bather to transfer onto the platform (a lateral transfer for an ambulant bather).

2. If a lateral transfer is not suitable, use appropriate equipment to hoist or transfer the bather into position. Refer to the relevant equipment user manual.

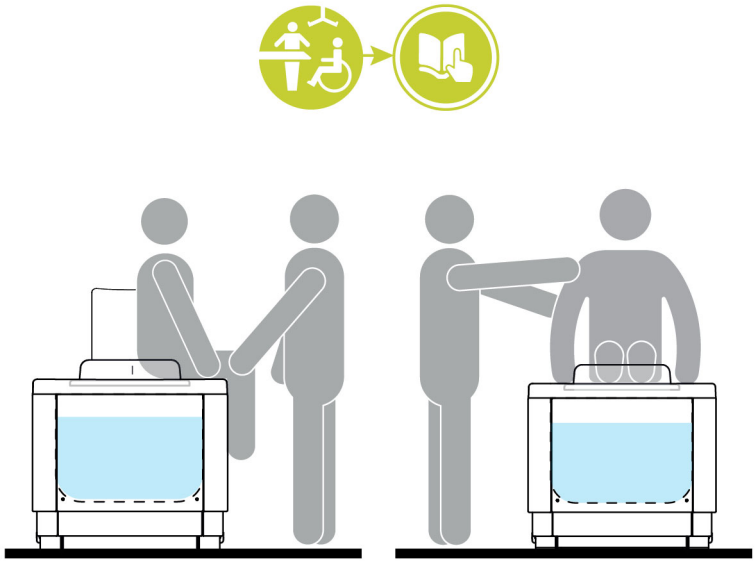

Fig 0573

3. Refer to Fig 0572. With the bather seated on the platform, press the Platform up button to raise the bath around the platform and bather. Observe the bather at all times. The bather is now immersed in the water.

4. Adjust the bath height using the Bath up and Bath down buttons (see *remote handset, page 17* for further details) to a comfortable height for the carer. The bath may be stopped at any time by releasing the button.

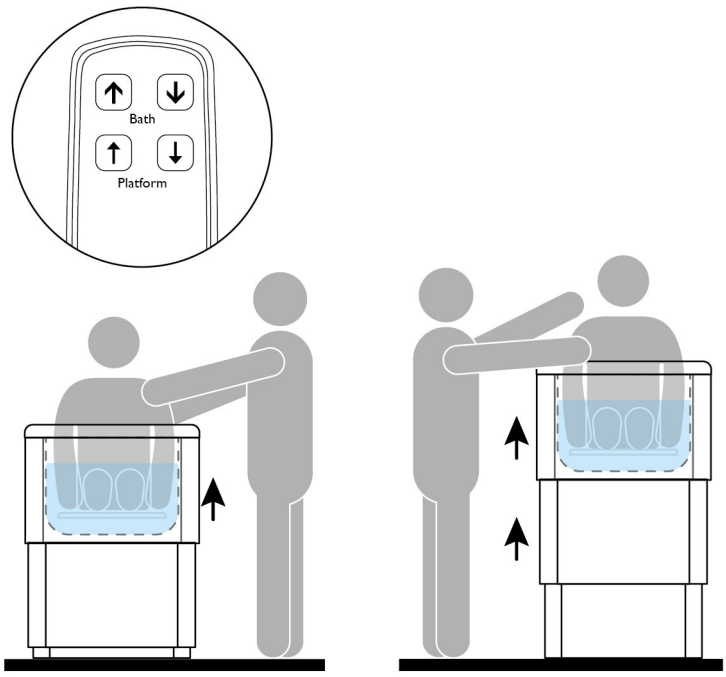

Fig 0572

TOP UP THE BATH

WARNING RISK OF SCALDING: Not checking the water temperature could cause serious injury or be fatal. The temperature of the hot water is limited to 43°C for safety. Use a thermometer to observe the temperature whilst filling and again before transferring the bather into the bath.

CAUTION: Do not exert excessive pressure on the bath panels as this may cause them to become ill-fitting or damaged over time.

1. Refer to Fig 0264. Depending on the options chosen you may have a twin lever bath filler (a) see *twin lever bath filler, page 27* for more information. Or for the autofill option (b), see *autofill, page 26* for more information.

2. Whilst observing the bather, open the hot tap (c) or press the hot autofill button (c) and top up the bath checking the temperature with a thermometer. Where necessary adjust the temperature using the cold tap (d) or the cold autofill button (d).

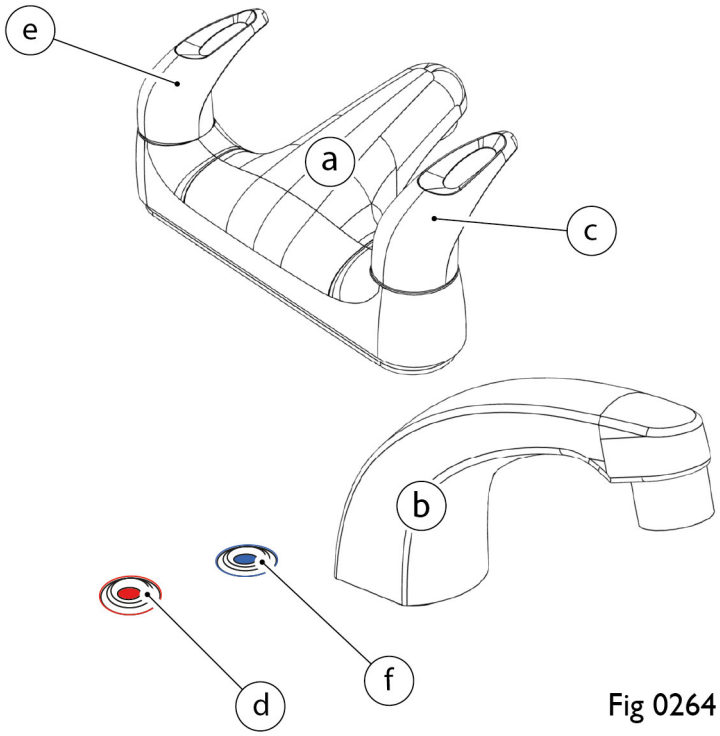

Fig 0264

TRANSFER BATHER OUT OF THE BATH

1. Lower the bath by pressing and holding the Bath down button on the handset. The operation can be stopped at any time by releasing the button.

2. Press and hold the Platform down button, which lowers the bath tub, removing the bather from the water. The operation is complete when the platform is flush with the top of the bath.

3. Use the platform for drying and dressing the bather prior to transfer.

4. Allow or assist the bather to transfer off the platform (a bed type transfer for an ambulant bather).

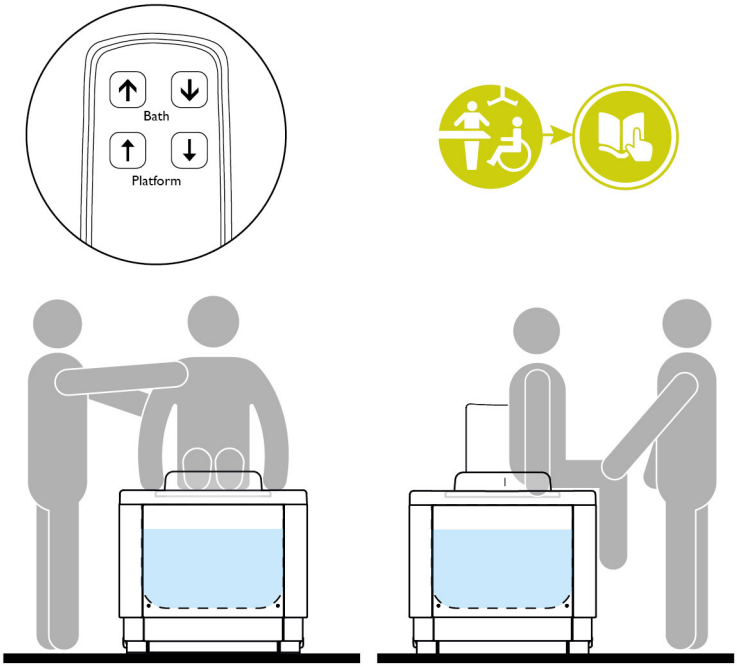

Fig 0574

5. If the use of a hoist is necessary, refer to the relevant equipment user manual to transfer the bather from the platform.

EMPTY THE BATH

The bath comes with a pop-up waste as standard.

1. Refer to Fig 0263. Open the pop-up waste by turning the chrome handle (a) clockwise. The waste plug (b) then opens to drain the bath.

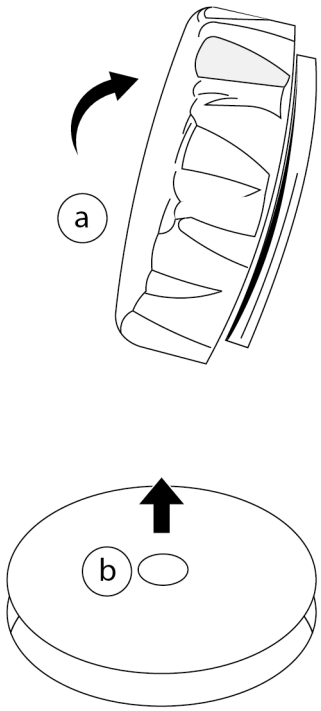

Fig 0263

RAISE THE PLATFORM

CAUTION: The backrest and footrest could become damaged if left on the platform during the raising operation. Remove these and any other optional items of equipment before raising the platform.

The platform will need to be raised in order to clean the bath after use.

1. Referring to Fig 0608, locate the locking plunger under the working side of the platform on the left (a).
2. As shown in Fig 0313, using your forefinger and middle finger, pull the locking plunger towards you (a), unlocking the platform.
3. It is now possible to raise the platform (b).
4. The platform will raise to a maximum angle of 95° on its gas struts with minimal assistance needed. Do not force the platform past this point as it will damage the mechanism.

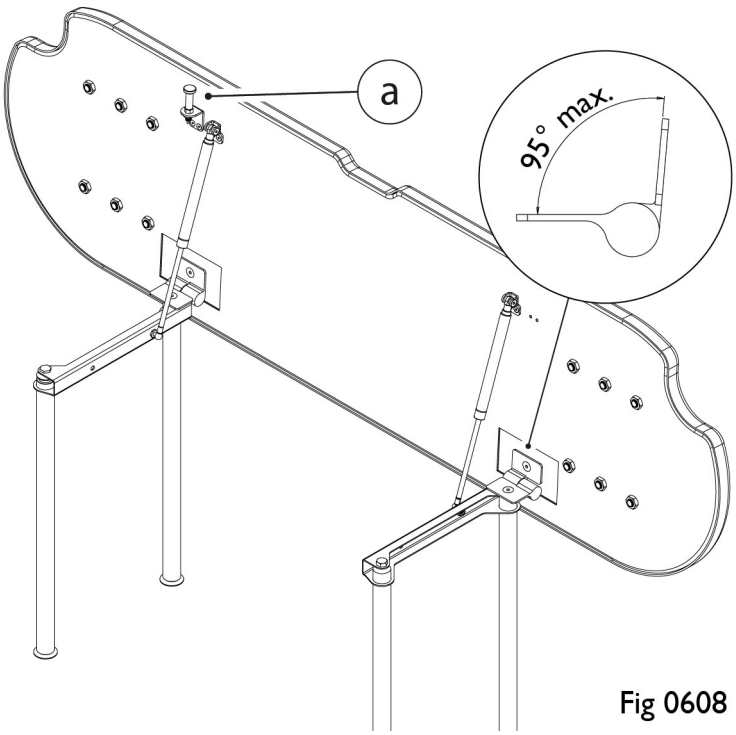

Fig 0608

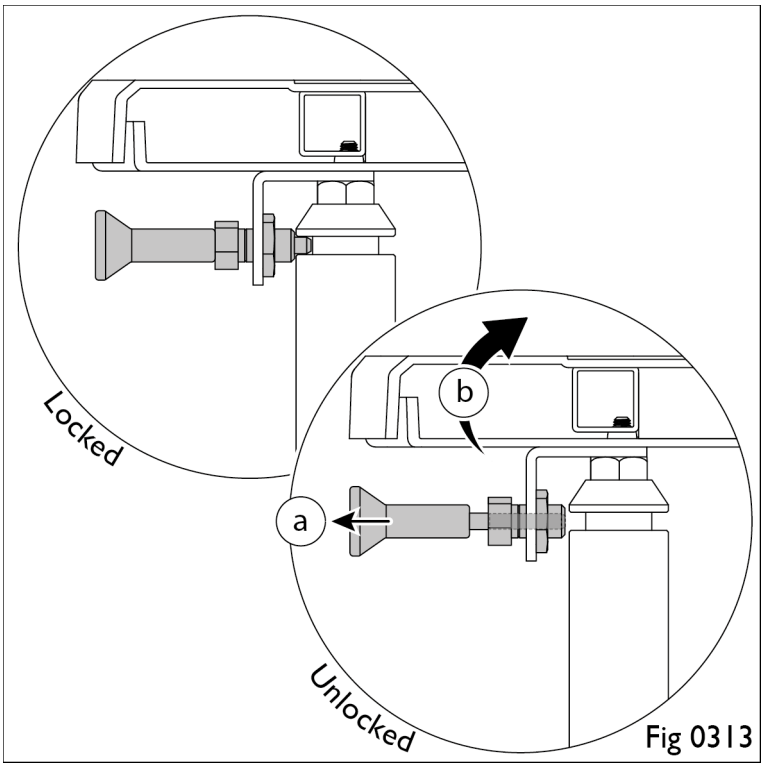

Fig 0313

OPTIONAL EQUIPMENT

For further information on the Air Spa, Chromotherapy Lighting or Sound System, please refer to the Accessories User Manual.

EASY SHOWER 5

The Easy Shower 5 is a Kiwa approved category 5 back-flow prevention device. It protects the water supply from any contaminants in the bathing water. The system operates as follows:

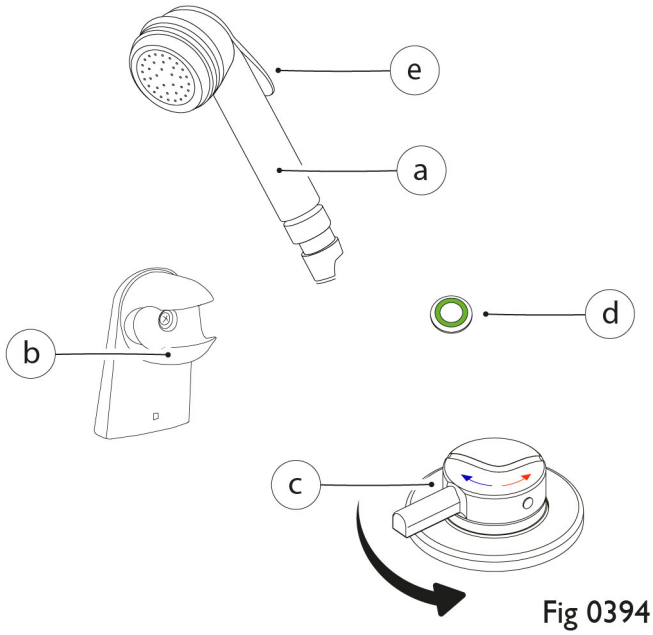

Fig 0394

1. Referring to Fig 0394, remove the shower head (a) from the holder (b) and turn the temperature control dial (c) anticlockwise fully until it is at its maximum temperature (indicated on the dial in red). This is the optimum showering temperature, which is controlled by a thermostatic valve and factory set at 38°C for safety.

2. Press the power button (d) and this will begin priming the shower pump. Once primed, the pump will stop and the shower is ready to use.

3. With the shower head directed into the bath, press the trigger (e) on the shower head to release the water. The pump will be active whenever the trigger is pressed. Check the temperature is safe with a thermometer and by hand. Release the trigger at any time to stop the water.

4. When showering is complete, turn the temperature control dial clockwise fully to its minimum temperature (indicated on the dial in blue) to stop the shower.

5. Press the power button to turn off the shower system. The green light will go out, indicating that the shower has been successfully switched off.

6. With the shower head over the bath, press the trigger to depressurise the system and then return the shower head to its holder to ensure that any excess water goes into the bath.

ROAMING SHOWER

The Roaming shower operates as follows:

1. Referring to Fig 0451, remove the shower head (a) from the holder (b) and, directing the shower head into the bath, turn the temperature control dial (c) anticlockwise fully until it is at its maximum temperature (indicated on the dial in red). This is the optimum showering temperature, which is controlled by a thermostatic valve and factory set at 38°C for safety.

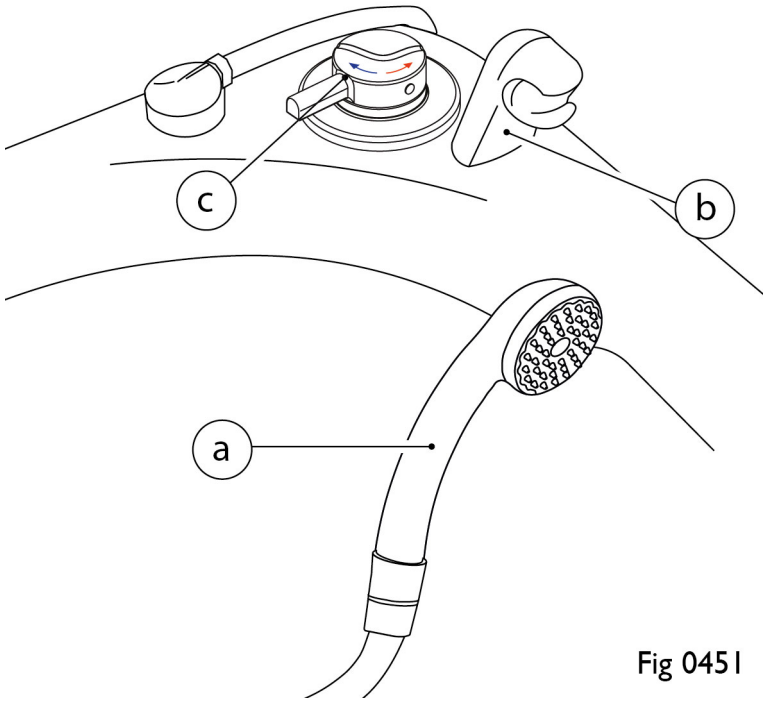

Fig 0451

2. When showering is complete, turn the control dial clockwise fully to its minimum temperature (indicated on the dial in blue) to stop the shower.

3. Return the shower head to its holder and allow any excess water to drain into the bath.

AUTOFILL

NOTE: The autofill buttons glow red (hot water) and blue (cold water) constantly until pressed and will flash during filling.

NOTE: The autofill option has a pre-set temperature of 43°C.

Autofill allows the bath to be filled at the press of a button prior to the bather entering the bath. The carer is free to administer to the bather in another room, if necessary, without any concern of the bath overflowing in their absence.

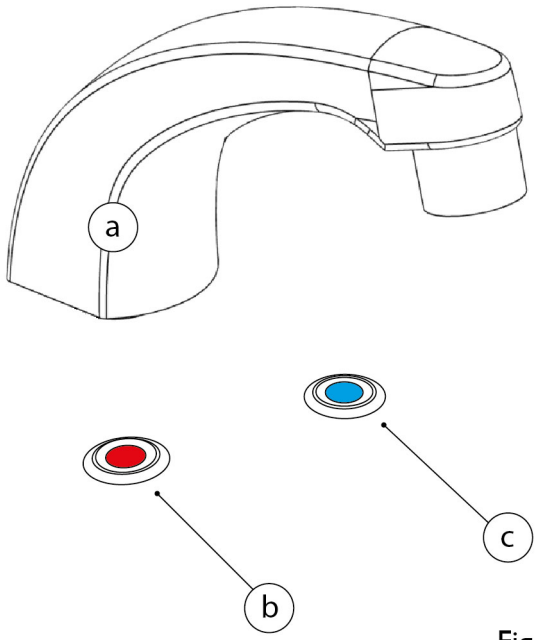

Fig 0246

Hot Water

The autofill option has a spout (a) as shown in Fig 0246. The hot water button (b) will be lit red. Press it once to initiate the water flow and the button will flash whilst this is happening. The water flow can be stopped at any time by pressing the button again.

To add more hot water, press the hot water button again. Check the water temperature with a thermometer - it should not exceed 43°C.

Cold Water

To reduce the temperature of the water, press the cold water button (c). The water flow can be stopped at any time by pressing the button again.

Check the water temperature with a thermometer.

Automatic Shutoff

Once one of the buttons has been pressed, the bath will fill to the lower level sensor at 75 mm below the overflow and stop automatically. If deeper water is required, the buttons can be pressed again, but autofill will automatically stop when the water reaches the higher level sensor at 10 mm below the overflow. Once the bath is filled to its maximum level, the lights will go out on the buttons to indicate that they cannot be pressed again.

It is not possible to add any more water to the bath once the water has reached the higher sensor - some of the water must be emptied first before autofill will allow more to be added.

Tamperproof Lockout

Autofill has a lockout to prevent wastage of water and tampering. To lock, press and hold both the hot water button and the cold water button for 10 seconds. The buttons will turn green, confirming that lockout is engaged.

To unlock, press and hold both the hot water button and the cold water button for 10 seconds again. The buttons will turn back to red and blue, confirming that lockout is disengaged.

TWIN LEVER BATH FILLER

NOTE: The twin lever bath filler option has a pre-set temperature of 43°C.

The twin lever bath filler, shown in Fig 0274308, operates as follows.

1. To open the hot tap, turn the hot water handle (a) clockwise. To close the hot tap, turn the hot water handle anticlockwise.
2. To open the cold tap, turn the cold water handle (b), anticlockwise. To close the cold tap, turn the cold water handle clockwise.

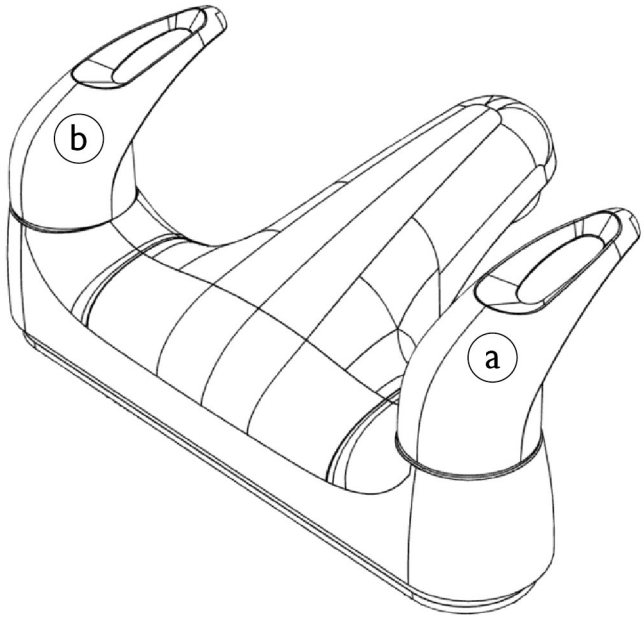

Fig 0274

BACKREST

a removable backrest as shown in Fig 0.

1. To install, take the backrest and insert into the holes at the head end of the platform.

2. Once bathing is complete, the backrest can be easily removed by pulling it vertically from the platform holes.

3. If using the mesh backrest cover, carefully remove it from the backrest by releasing the velcro. This can be placed in a bag or pillowcase and machine washed at a maximum of 40°C using any mild detergent.

4. The backrest itself should be wiped clean with soapy water and a soft cloth, dried and then stored in a clean, dry place until required again.

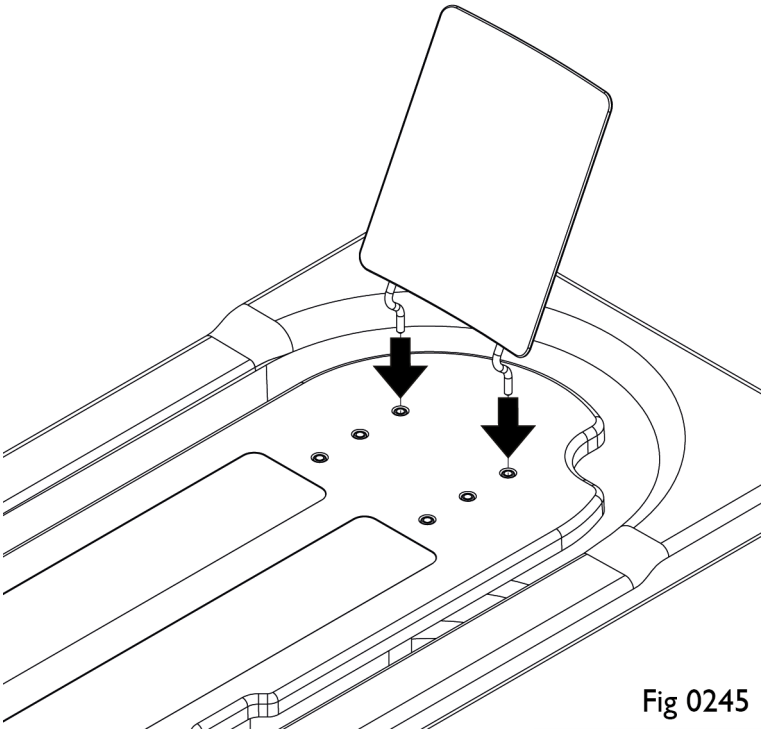

Fig 0245

FOOTREST

The optional footrest can be used in conjunction with the backrest to help support the bather on the platform.

1. To install, take the footrest and insert into the holes in the platform at the tap end of the bath.

2. The footrest can be easily removed by pulling it vertically from the platform holes.

3. Clean with mousse/washing-up liquid and warm water.

4. Wipe dry and store in a clean, dry place.

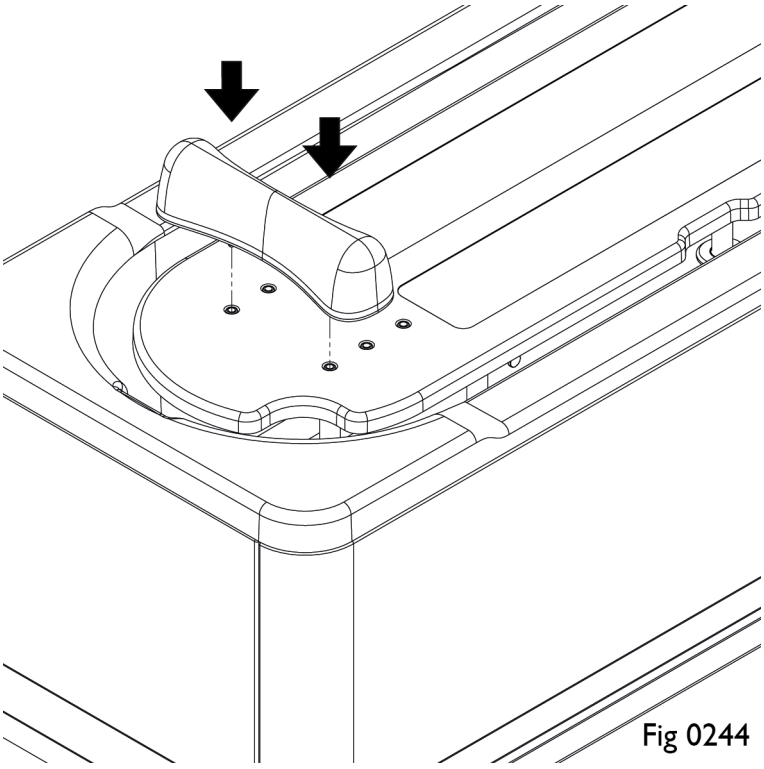

Fig 0244

SCHUCHMANN BASTI SEAT

This seat can be mounted onto the bath platform and is intended for smaller bathers up to 45 kg. There are multiple options for configuring the seat for the bather based on their size, weight and needs, but a Basti Seat Fixing Bracket must always be used.
For all the details relating to this option, please see the Basti Seat Fixing Bracket User and Parts Manual.

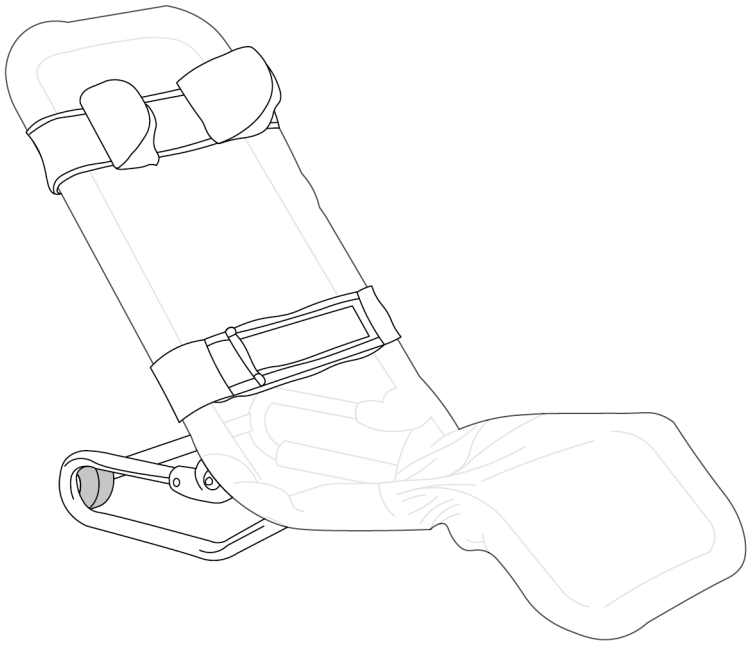

Fig 0275

For any further information on the options detailed in this section, or on the other numerous options available with this bath (see *bath and equipment overview, page 5*), contact your authorised representative or call **Gainsborough Healthcare Group Ltd.** on 01527 400022.

MAINTENANCE AND CLEANING



CAUTION: The bath and any additional equipment could become damaged or wear prematurely if thorough, regular, cleaning and maintenance is not carried out. Contact bath supplier for clarification or additional assistance if required.



CAUTION: The bath and any additional equipment could be damaged irreparably, if abrasive cleaners, bleach, alcohol or scourers are used. Only use cleaning methods outlined below.



NOTE: Ensure your bath is cleaned, serviced and maintained regularly. Maintenance and cleaning information is provided for maintenance staff employed to look after the bath equipment supplied.



Contact: Please ask for details of the of **Gainsborough Healthcare Group Ltd.** Service and Maintenance Agreement on 01527 400022.

It is of the utmost importance to follow the Health and Safety information (see Safety Information), before carrying out any cleaning or maintenance procedures. The following routines are a minimum requirement. Where a high volume of use occurs, increase the frequency as appropriate.

In addition to the maintenance and cleaning requirements detailed here, it is the responsibility of those who own or control the equipment, under the Provision and Use of Work Equipment Regulations 1998 (PUWER), to ensure where applicable, that periodic Lifting Operations and Lifting Equipment Regulations (LOLER) testing is undertaken.

DAILY

Routine	Method
Visual inspection	• Inspect the bath for broken equipment, leaks or any general issues
Minor bath clean	• Wipe bath whilst draining with a soft damp cloth, then wipe dry

WEEKLY

Routine	Method
Major bath clean	• Use cleaning mousse/washing-up liquid/warm water and a soft cloth - stubborn stains may require a non-abrasive cream cleaner • Wipe dry
Inspect handset/cable	• Inspect handset and cable for **ANY** signs of damage

Check water temperature	• Using a calibrated thermometer operate the hot tap/autofill and check the water temperature does NOT exceed 43°C
Bath operation	• Operate bath and platform up and down ensure it operates correctly without obstruction or any undue noise

MONTHLY

Routine	Method
Remove Lyme/Calcium deposits	• Water stain deposits on the bath may be removed using a non-abrasive cream cleaner
Inspect platform rod seals	• Ensure the platform rod seals are in good condition see *platform rod seals, page 33*
Check remote handset operation	• Operate ALL bath controls ensuring all operations are as expected and free from unusual noises see *remote handset, page 17*
Test RCD	• Operate the Residual Circuit Breaker (RCD) press the test button and reset
Inspect Roaming Shower	• Operate the Roaming Shower and verify that it is working as described see *roaming shower, page 25*
Check Easy Shower 5	• Operate the Easy Shower 5 if this option is installed and verify that it is working as described see *easy shower 5, page 24*
Test Autofill functionality	• Test the autofill operation and water levels see *autofill, page 26*

SIX MONTHLY

Routine	Method
Visual inspection	• Visually inspect bath ensure there is **NO** damage
Panel inspection	• Check all external bath panels are secure with all screws/ fixings in place
Inspect platform fixings and operation	• Lift the platform (see *raise the platform, page 23*), verify that the hinges and fixings are secure, then lower the platform to check that the locking plunger locks the platform securely
Inspect all optional equipment	• Inspect any optional equipment to ensure it is free from **ANY** damage
Check operation of optional electrical equipment	• Check the operation of the button controls ensure the Air Spa, Chromotherapy Lighting and or Sound System work in line with the operation information contained in the Accessories User Manual
Servicing	• Servicing by **Gainsborough Healthcare Group Ltd.** or a trained approved company with guidance

ANNUALLY

Routine	Method
Servicing	• Servicing by **Gainsborough Healthcare Group Ltd.** or a trained approved company with guidance

Maintenance Schedule Minimum Frequency	Day	Week	Month	6 Month	Year
Visual inspection (before use)	X				
Minor clean (after use)	X				
Major clean (after use)		X			
Inspect handset/cable		X			
Check water temperature		X			
Bath operation		X			
Remove Lyme/Calcium deposits			X		
Inspect platform rod seals			X		
Check remote handset operation			X		
Test RCD			X		
Inspect Roaming shower			X		
Check Easy Shower 5			X		
Test autofill functionality			X		
Visual inspection				X	
Panel inspection				X	
Inspect platform fixings and operation				X	
Inspect all optional safety equipment				X	
6-month service and LOLER inspection				X	
Annual service and LOLER inspection					X

PLATFORM ROD SEALS

It is important that the present and securely in place to ensure that water ingress does not cause damage to the bath.

Check that the wiper seal (a), as shown in Fig 0, is located between . It should be smooth, undamaged and not folded over on itself.

Any visible defects or issues with the wiper seal should be dealt with by a service engineer as soon as possible.

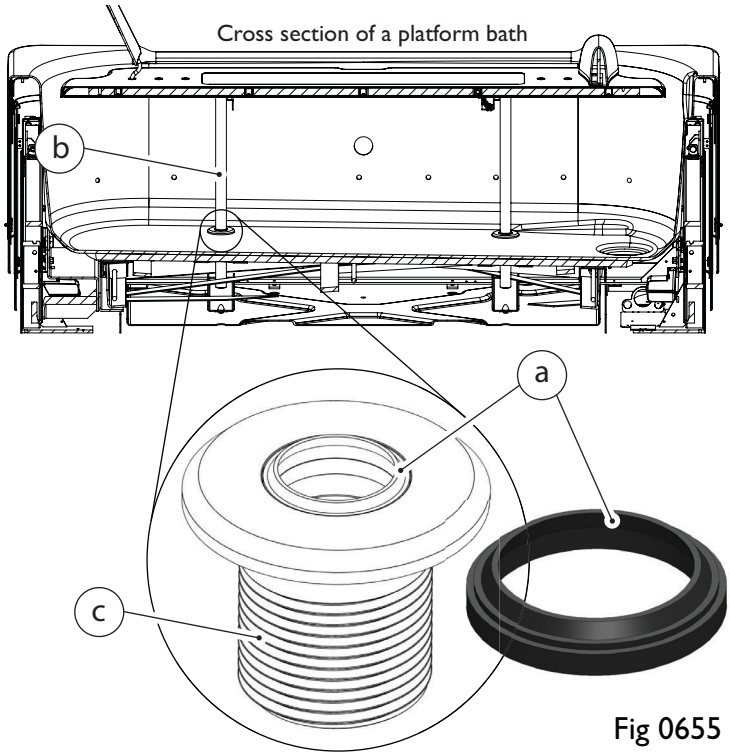

Fig 0655

TROUBLESHOOTING

The following is a basic troubleshooting guide in the event of failure, it is not intended as a comprehensive diagnostic routine. If the bath or equipment fail to operate as intended following these basic checks, please contact your authorised representative or a **Gainsborough Healthcare Group Ltd.** service support engineer on 01527 400022.

PROBLEM	POSSIBLE CORRECTIVE ACTION
Bath/Platform Inoperative	• Check condition of handset cable and that it is securely connected to the bath • Check that the 5A SFS is providing power to the bath • Check Residual Current Device (RCD) has power and not tripped - if it has tripped, press the reset button
Bath Judders	• Check there are no obstructions on or around the bath • Check bath is level
Bath Noisy	• Check there are no obstructions on or around the bath • Check if pipework, cables or anything else is obstructing any panels or framework during operation • Check that the panels are not obstructing each other and are free to move
Water Leaking/Loss	• Visually inspect for bath damage • Turn water supply to the bath off to avoid water damage
Bath Uneven	• May occur after a power failure - to attempt a reset, operate handset **Bath down** button then operate the **Platform down** button to lowest position, then re-test
Bath Beeping	• Mains power supply failure - check 5A SFS and RCD
Items Visibly Damaged	• Any obviously damaged items should be reported and decommissioned immediately
Air Spa Does Not Operate	• Is the bath filled sufficiently? (See Accessories User Manual) • Ensure mains power is supplied and switched on • Check fuse at the switched fused spur
Chromotherapy Lighting Does Not Operate	• Ensure mains power is supplied and switched on • Check fuse at the switched fused spur

Air Spa And Chromotherapy Lighting Does Not Operate	• Is the bath filled sufficiently? (See Accessories User Manual) • Ensure mains power is supplied and switched on • Check fuse at the switched fused spur
Sound System Does Not Operate	• Ensure mains power is supplied and switched on • Check fuse at the switched fused spur • Have you paired you device with the sound system? Pair your device and retry. (See Accessories User Manual)
Noise Heard After The Spa Is Switched Off	• This is normal operation of the Automatic Purge System. (See Accessories User Manual)

WARRANTY

For information on the warranty supplied with this bath, please refer to separate warranty documentation.



Contact: For further details regarding extended warranties with Abacus (part of **Gainsborough Healthcare Group Ltd.**), please call 01527 400024 or email warranties@ghg-uk.com.

DECLARATION OF CONFORMITY

Gainsborough Healthcare Group
Life enhancing bathing

CE

Declaration of Conformity

Manufacturer's name: Gainsborough Healthcare Group Ltd
Manufacturer's Address: 10 & 11 The Oaks
Clews Road
Redditch
Worcestershire
B98 7ST
Equipment Type: Bath Chassis with Platform

Gainsborough Healthcare Group Ltd solely declares that the below products comply with the essential requirements and fulfil the provision of the CE marking.

Bath Model	UDI	P/N	
Gemini 1700 – Height Adjustable Bath with Platform – Kit Form (Side Feed)	(01)05060968110413	AQK142LW	AQK142RW
Gemini 1700 – Height Adjustable Bath with Platform – (Side Feed)	(01)05060968110413	AQ142LW	AQ142RW
Gemini 1700 – Height Adjustable Bath with Platform – Peninsula – Kit Form (End Feed)	(01)05060968110413	AQK142LWP	AQK142RWP
Gemini 1700 – Height Adjustable Bath with Platform – Peninsula (End Feed)	(01)05060968110413	AQ142LWP	AQ142RWP
Gemini 1700 – Height Adjustable Bath with Platform – Kit Form (Floor Feed)	(01)05060968110413	AQK142LWF	AQK142RWF
Gemini 1700 – Height Adjustable Bath with Platform (Floor Feed)	(01)05060968110413	AQ142LWF	AQ142RWF
GSB Bio Oraya 1700 Height Adjustable Bath with Platform (Side Feed)	(01)05060968110239	BORAW7L	BORAW7R
GSB Bio Oraya 1700 Height Adjustable Bath with Platform (End Feed)	(01)05060968110239	BORAW7LP	BORAW7RP
GSB Bio Oraya 1700 Height Adjustable Bath with Platform (Floor Feed)	(01)05060968110239	BORAW7LF	BORAW7RF
Gemini 2000 - Dual Lift Bath with Platform - Kit Form (Side Feed)	(01)05060968110550	GMWK20L	GMWK20RP
Gemini 2000 Dual Lift Bath with Platform (Side Feed)	(01)05060968110550	GMW20L	GMW20RP
Gemini 2000 Dual Lift Bath with Platform- Kit Form (Side Feed)	(01)05060968110550	GMWK20R	GMWK20LP
Gemini 2000 Dual Lift Bath with Platform (Side Feed)	(01)05060968110550	GMW20R	GMW20LP
Gemini MX Dual Lift Bath with Platform Kit Form (Side Feed)	(01)05060968110710	MXWK20L	MXWK20R
Gemini MX Dual Lift Bath with Platform (Side Feed)	(01)05060968110710	MXW20L	MXW20R
Gemini MX Dual Lift Bath with Platform Kit Form (End Feed)	(01)05060968110710	MXWK20LP	MXWK20RP
Gemini MX Dual Lift Bath with Platform (End Feed)	(01)05060968110710	MXW20LP	MXW20RP

The products correspond to Class 1 Medical Device Directive.

The following standards and European Directives apply:

- 2006/42/EC Machinery Directive
- MDR 2017-745/EU – Class 1 Medical Device
- ROHS – Restriction of Hazardous Substances
- IEC 60601
- BS EN 60601-01-11 – General requirements for basic health and safety and essential performance – Home healthcare environment
- BS EN 60601-1-6 – General requirements for basic safety and essential performance
- BS EN 62366-1 – Application of usability engineering to medical devices
- BS EN ISO 10535 :2021 – Assistive products – Hoists for the transfer of persons – Requirements and test methods
- BS EN ISO 10993-1 – 2022 – Biological Evaluation of medical devices
- BS EN ISO 21856-2022 – Assistive products – General requirements and test methods



……..

Peter Eckhardt
C.E.O

For and on behalf of Gainsborough Healthcare Group Ltd

Date of issue; 13/03/25

Registered in England No. 10433373 | VAT No. 254046128

Gainsborough Healthcare Group
Life enhancing bathing

Declaration of Conformity

Manufacturer's name: Gainsborough Healthcare Group Ltd
Manufacturer's Address: 10 & 11 The Oaks
Clews Road
Redditch
Worcestershire
B98 7ST
Equipment Type: Bath Chassis with Platform

Gainsborough Healthcare Group Ltd solely declares that the below products comply with the essential requirements and fulfil the provision of the UKCA marking.

Bath Model	UDI	P/N	
Gemini 1700 – Height Adjustable Bath with Platform – Kit Form (Side Feed)	(01)05060968110413	AQK142LW	AQK142RW
Gemini 1700 – Height Adjustable Bath with Platform – (Side Feed)	(01)05060968110413	AQ142LW	AQ142RW
Gemini 1700 – Height Adjustable Bath with Platform – Peninsula – Kit Form (End Feed)	(01)05060968110413	AQK142LWP	AQK142RWP
Gemini 1700 – Height Adjustable Bath with Platform – Peninsula (End Feed)	(01)05060968110413	AQ142LWP	AQ142RWP
Gemini 1700 – Height Adjustable Bath with Platform – Kit Form (Floor Feed)	(01)05060968110413	AQK142LWF	AQK142RWF
Gemini 1700 – Height Adjustable Bath with Platform (Floor Feed)	(01)05060968110413	AQ142LWF	AQ142RWF
GSB Bio Oraya 1700 Height Adjustable Bath with Platform (Side Feed)	(01)05060968110239	BORAW7L	BORAW7R
GSB Bio Oraya 1700 Height Adjustable Bath with Platform (End Feed)	(01)05060968110239	BORAW7LP	BORAW7RP
GSB Bio Oraya 1700 Height Adjustable Bath with Platform (Floor Feed)	(01)05060968110239	BORAW7LF	BORAW7RF
Gemini 2000 - Dual Lift Bath with Platform - Kit Form (Side Feed)	(01)05060968110550	GMWK20L	GMWK20RP
Gemini 2000 Dual Lift Bath with Platform (Side Feed)	(01)05060968110550	GMW20L	GMW20RP
Gemini 2000 Dual Lift Bath with Platform- Kit Form (Side Feed)	(01)05060968110550	GMWK20R	GMWK20LP
Gemini 2000 Dual Lift Bath with Platform (Side Feed)	(01)05060968110550	GMW20R	GMW20LP
Gemini MX Dual Lift Bath with Platform Kit Form (Side Feed)	(01)05060968110710	MXWK20L	MXWK20R
Gemini MX Dual Lift Bath with Platform (Side Feed)	(01)05060968110710	MXW20L	MXW20R
Gemini MX Dual Lift Bath with Platform Kit Form (End Feed)	(01)05060968110710	MXWK20LP	MXWK20RP
Gemini MX Dual Lift Bath with Platform (End Feed)	(01)05060968110710	MXW20LP	MXW20RP

The products correspond to Class 1 Medical Device Directive.

The following standards and European Directives apply:

- 2006/42/EC Machinery Directive
- MDR 2017-745/EU – Class 1 Medical Device
- ROHS – Restriction of Hazardous Substances
- IEC 60601
- BS EN 60601-01-11 – General requirements for basic health and safety and essential performance – Home healthcare environment
- BS EN 60601-1-6 – General requirements for basic safety and essential performance
- BS EN 62366-1 – Application of usability engineering to medical devices
- BS EN ISO 10535 :2021 – Assistive products – Hoists for the transfer of persons – Requirements and test methods
- BS EN ISO 10993-1 – 2022 – Biological Evaluation of medical devices
- BS EN ISO 21856-2022 – Assistive products – General requirements and test methods



……..

Peter Eckhardt
C.E.O

For and on behalf of Gainsborough Healthcare Group Ltd

Date of issue; 13/03/25

Registered in England No. 10433373 | VAT No. 254046128

ELECTROMAGNETIC COMPATIBILITY

Electrical medical equipment is subject to special precautionary measures with regard to EMC and must be installed and operated in accordance with the EMC instructions included in the accompanying documents.

For the devices and systems from **Gainsborough Healthcare Group Ltd.**, no special measures must be observed.



NOTE: Portable and mobile HF-communications equipment can interfere with electrical medical equipment.

The product standard applied to **Gainsborough Healthcare Group Ltd.** are;

- BS EN 60601-1-2:2015 Medical electrical equipment Part 1-2: General requirements for basic safety and essential performance - collateral standard: Electromagnetic disturbances - Requirements and tests.
- BS EN 61000-3-2: 2014 Electromagnetic compatibility EMC. Limits. Limits for harmonic current emissions (equipment input current < 16A per phase).
- BS EN 61000-3-3:2013 Electromagnetic compatibility (EMC). Limits. Limitation of voltage changes, voltage fluctuations and flicker in public low-voltage supply systems, for equipment with rated current < 16A per phase and not subject to conditional connection.

GUIDANCE AND MANUFACTURER'S DECLARATION - ELECTROMAGNETIC IMMUNITY

The Bath Chassis with Platform has been designed for use in the following listed electromagnetic environments. The customer or the user of the Bath Chassis with Platform must ensure that the appliance is used in such environment.

Emission Measurements	Compliance	Electromagnetic Environment Guidance
High frequency (HF) Radiated Emissions to BS EN 55011	Group 1 - no internally generated electromagnetic radiation	The Bath Chassis with Platform does not use HF radiation for internal functions. Therefore, the HF radiation of the device is very low and any interference with adjacent electrical equipment is unlikely.
High frequency (HF) Radiated emissions to BS EN 55011	Class B	The Bath Chassis with Platform is intended for use in any type of facility including living quarters and those that are directly connected to a public mains network that supplies residential buildings and buildings used for domestic purposes.
Conducted Emissions to BS EN 55014	Class B	
Harmonics to IEC 6100-3-2	Class A	
Voltage fluctuations / flicker to IEC 6100-3-3	Compliant	

Immunity Testing	BS EN 60601 - Test Level	Compliance Level	Electromagnetic Environment Guidance
Discharging of static electricity (ESD) to BS EN 61000-4-2	+- 8kV contact discharge. +- 15kV air discharge	+- 8kV contact discharge. +- 15kV air discharge	The floor must be in wood, concrete or ceramic tiles. In case of floors in synthetic material, the relevant air humidity must be at least 30%.
Rapid transient interference pulses/ burst BS EN 61000-4-4	+-2kV for power supply cables	+-2kV for power supply cables	The quality of the supply voltage should match that of a typical business or hospital environment.
Overvoltage (Surges) BS EN 61000-4-5	+-1kV Mains cable connection differential mode +-2kV Mains Cable common mode	+-1kV Mains cable connection differential mode +-2kV Mains Cable common mode	The quality of the supply voltage should match that of a typical business or hospital environment.
Voltage drops, short interruptions and voltage fluctuations in the power supply input cables IEC 61000-4-11	<5% Ut (>95% drop of Ut) For 0.5 period <5% Ut (>95% drop of Ut) For 0.5 period <70% Ut (>30% drop of Ut) For 25 periods <5% Ut (>95% drop of Ut) For 5s	<5% Ut (>95% drop of Ut) For 0.5 period <5% Ut (>95% drop of Ut) For 0.5 period <70% Ut (>30% drop of Ut) For 25 periods <5% Ut (>95% drop of Ut) For 5s	The quality of the supply voltage should match that of a typical business or hospital environment.
Radiated RF Field Immunity	3 V/m 80MHz - 2700MHz Spot check frequencies in accordance with BS EN 60601-1-2 requirements	3 V/m	

Immunity Testing	IEC 60601 - Test Level	Compliance Level	Electromagnetic Environment Guidance
Conducted RF BS EN 61000-4-6	3 Vrms 150 kHz up to 80 MHz 6 Vrms at spot frequencies	3 Vrms 150 kHz up to 80 MHz 6 Vrms at spot frequencies	Portable and mobile HF communications equipment should be used no closer to any part of the Bath Chassis with Platform including cables, than the recommended separation distance calculated in accordance with the equation applicable to the frequency of the transmitter Recommended separation distance $D=0.35\sqrt{P}$ $D=1.2\sqrt{P}$ 80 MHz up to 800 MHz $D=2.3\sqrt{P}$ 800 MHz up to 2.5 GHz With P as the rated output of the transmitter in Watt (W) in accordance with the manufacturer's specifications and d as the recommended separation distance in meter (m). The field strength of fixed HF-transmitters as determined by an electromagnetic field survey - should be less than the compliance level in each frequency range.
			In the vicinity of equipment marked with this symbol, interference may occur.

NOTE: This manual could possibly not apply to all situations. Electromagnetic propagation is affected by absorption and reflection from structures, objects and people.

The field strength of fixed RF transmitters, such as base stations of mobile phones and land mobile radios, amateur radio stations, AM and FM radios as well as radio and television broadcast media cannot be predicted theoretically with accuracy. To assess the electromagnetic environment due to fixed RF transmitters, an electromagnetic site survey is recommended. If the field strength measured in the environment where the Bath Chassis with Platform is to be used, exceeds the applicable HF compliance level, special care should be taken that a normal operation of the Bath Chassis with Platform can be guaranteed. In case anomalies are identified, additional measures could be required, such as different alignment or a change of the location of the Bath Chassis with Platform.
In the frequency range from 150 kHZ to 80 MHz, the field strength must be less than 3 V/m.

Rated Output of the Transmitter	*Separation Distance Depending on the Transmitting Frequency in m*		
	150 kHz to 800 MHz $D=0.35\sqrt{P}$	80 MHz to 800 MHz $D=1.2\sqrt{P}$	800 MHz to 2.5 GHz $D=2.3\sqrt{P}$
0.01	0.04	0.12	0.23
0.1	0.11	0.38	0.73
1	0.35	1.2	2.3
10	1.1	3.8	7.3
100	3.5	12	23

For transmitters rated at a maximum output power not listed above, the recommended separation distance d in meters (m) can be determined using the equation applicable to the frequency of the transmitter, where P is the maximum output power rating of the transmitter in watts (W) according to the specifications given by the transmitter manufacturer.

NOTE: At 80 MHz and 800 MHz, the separation distance for the higher frequency range applies.

NOTE: These guidelines could not apply to all situations. The dispersion of electromagnetic waves is affected by absorption and reflection from structures, objects and persons.

Gainsborough Healthcare Group

Life enhancing bathing



ABACUS

SPECIALIST BATHROOM SOLUTIONS

Abacus Healthcare part of GAINSBOROUGH HEALTHCARE GROUP LTD
10 & 11 Clews Road, Redditch, Worcestershire B98 7ST
Tel: 01527 400024 Email: info@abacushealthcare.co.uk
www.abacushealthcare.co.uk

CUSTOMER TRAINING RECORD

CUSTOMER DETAILS

Date:	

Address:	

Postcode:	

PRODUCT(S) DISCUSSED AND DEMONSTRATED

Bath Type	Serial Number	Bath Location

Trainer's Name:	

Trainer's Signature:	

CUSTOMER TRAINING RECORD

VERSION 1.3 ~ 09.26

TRAINING ATTENDEES

I agree that I have read and understood the User Manual and that I have been trained on how to use this bath safely and correctly.

Attendee Name	Signature	Position



CAUTION: These products are Class I medical devices and should only be used by the above trained people in accordance with the manufacturer's User Manual provided.

A copy of the manufacturer's User Manual has been left with:

Name:	

Signature:	

Position:	